Information Fusion 126 (2026) 103632

Contents lists available at ScienceDirect

Information Fusion

journal homepage: www.elsevier.com/locate/inffus

Full length article

LMVD: A large-scale multimodal vlog dataset for depression detection in the wild

Lang He [a,b,c,*], Kai Chen [a,b,c], Junnan Zhao [a,b,c], Yimeng Wang [a,b,c], Ercheng Pei [a,b,c], Haifeng Chen [d], Jiewei Jiang [e], Shiqing Zhang [f], Jie Zhang [a,b,c], Zhongmin Wang [a,b,c], Tao He [g], Prayag Tiwari [h]

[a] School of Computer Science and Technology, Xi'an University of Posts and Telecommunications, 618 Chang'an West Steet, Chang'an District, Xi'an, 710121, Shaanxi, China
[b] Shaanxi Key Laboratory of Network Data Analysis and Intelligent Processing, Xi'an University of Posts and Telecommunications, 618 Chang'an West Steet, Chang'an District, Xi'an, 710121, Shaanxi, China
[c] Xi'an Key Laboratory of Big Data and Intelligent Computing, Xi'an University of Posts and Telecommunications, 618 Chang'an West Steet, Chang'an District, Xi'an, 710121, Shaanxi, China
[d] College of Electronic Information and Artificial Intelligence, Shaanxi University of Science and Technology, Xi'an, 710016, Shaanxi, China
[e] School of Electronic Engineering, Xi'an University of Posts and Telecommunications, Xi'an, 710016, Shaanxi, China
[f] Institute of Intelligent Information Processing, Taizhou University, Taizhou, 318000, Zhejiang, China
[g] School of Education, Shenzhen University, Shenzhen, 518060, Guangdong, China
[h] School of Information Technology, Halmstad University, Halmstad, Sweden

ARTICLE INFO

Keywords:
Depression detection
Transformer
Vlog
Multimodal
Deep learning

ABSTRACT

Depression profoundly impacts multiple dimensions of an individual's life, including personal and social functioning, academic achievement, occupational productivity, and overall quality of life. With recent advancements in affective computing, deep learning technologies have been increasingly adopted to identify patterns indicative of depression. However, due to concerns over participant privacy, data in this domain remain scarce, posing significant challenges for the development of robust discriminative models for depression detection. To address this limitation, we build a **L**arge-scale **M**ultimodal **V**log **D**ataset (LMVD) for depression recognition in real-world settings. The LMVD dataset comprises 1,823 video samples, totaling approximately 214 h of content, collected from 1,475 participants across four major multimedia platforms: Sina Weibo, Bilibili, TikTok, and YouTube. In addition, we introduce a novel architecture, MDDformer, specifically designed to capture non-verbal behavioral cues associated with depressive states. Extensive experimental evaluations conducted on LMVD demonstrate the superior performance of MDDformer in depression detection tasks. We anticipate that LMVD will become a valuable benchmark resource for the research community, facilitating progress in multimodal, real-world depression recognition. The dataset and source code will be made publicly available at: https://github.com/helang818/LMVD.

1. Introduction

Major depression disorder (MDD) has been projected to a primary mental illness by 2030. A comprehensive survey and meta-analysis revealed that 33.7% of 41,531 individuals experienced depression during the COVID-19 pandemic [1]. After analyzing longitudinal data from 26,772 participants, Pierce et al. found that 22.5% of individuals developed persistent depression trajectories post-COVID, with 68% of cases remaining undiagnosed after 18 months [2]. In addition, symptoms such as fatigue or apathy are often misinterpreted. Depression can affect various aspects of daily life, including individuals' careers, academic pursuits, and family life [3]. In severe cases, individuals suffering from depression may contemplate or attempt suicide [4]. Despite many attempts to identify depression, recent findings suggest that its prevalence of depression is increasing, particularly among younger populations.

Depressed subjects often express several different non-verbal behaviors, e.g., facial expressions, body gestures, and lack of smiling. The Diagnostic and Statistical Manual of Mental Disorders (DSM-V) outlines symptoms such as agitation (e.g., inability to sit still, pacing, and hand-wringing) or psychomotor retardation (e.g., slowed speech and

* Corresponding author.
E-mail address: langhe@xupt.edu.cn (L. He).

https://doi.org/10.1016/j.inffus.2025.103632
Received 9 October 2024; Received in revised form 28 July 2025; Accepted 14 August 2025
Available online 22 August 2025
1566-2535/© 2025 Elsevier B.V. All rights are reserved, including those for text and data mining, AI training, and similar technologies.

body movements, and increased response latency) in individuals with depression. Current clinical approaches for diagnosing depression are primarily based on clinician assessments or self-reports, both of which are inherently subjective. Global disparities in access to mental health treatment exacerbate the issue. According to Moitra et al. [5], only 23% of individuals with depression in low-income countries receive minimally adequate care, in contrast to 53% in high-income regions. With the rapid advancement of computer vision techniques, several methods have been explored to assess depression severity. Existing approaches can be broadly categorized into hand-crafted [6–9] and deep learning-based methods [10–18].

From a modality perspective, depression recognition approaches can be classified into those based on audiovisual cues, social media data (e.g., Weibo, Twitter), and physiological or non-physiological signals [19,20], such as skin conductance, electroencephalography (EEG), magnetoencephalography (MEG), electrocardiography (ECG), heart sounds, respiration, and pulse signals. Despite promising results, several challenges remain in leveraging multimodal signals for effective depression recognition. This is especially true in the deep learning community, where a substantial amount of data is required to train models. A review of existing depression datasets [3] reveals that the majority contain limited samples due to privacy concerns. Moreover, most available datasets are collected in controlled lab settings during doctor-patient interactions, potentially missing natural behavioral patterns expressed in real-world environments [21]. This ecological gap is especially concerning, as lab-based assessments fail to identify up to 81% of individuals with persistent depressive symptoms, as shown in longitudinal studies. Although Yoon et al. [22] introduced a D-Vlog depression dataset with 961 samples, including facial landmarks and low-level descriptors (LLDs), He et al. [12] proposed a deep learning framework, deep local global attention convolutional neural network (DLGA-CNN), which integrates local and global attention mechanisms to automatically recognize depression from facial videos. Mao et al. [23] developed a deep learning model that uses multimodal features to predict depression severity from speech and text content.

To address the aforementioned challenges, we build a large-scale multimodal vlog database (LMVD). These vlogs, recorded and uploaded voluntarily by users, motivate us to release this dataset to capture real-world depression-related patterns. Firstly, we collect the vlogs from three Chinese multimedia platforms (Sina Weibo, Bilibili, and Tiktok) based on the following keywords related to depression ("depressed category": depression, my depressed life, and depressed vlog) in the depressed category and; "health category:" daily life, daily vlog, my vlog in the Non-depressed category. In addition, for each word, the following labels are also considered such as lower mood, loss of interest in many things, insomnia, and persistent thoughts of death or suicide. Secondly, volunteers filtered out unusable clips based on criteria such as gender and duration. Thirdly, volunteers and clinicians collaboratively annotated the videos. Volunteers initially checked video quality and provided annotations, which were then verified and finalized by clinicians. Subsequently, we extract audio and Chinese text from the vlogs. Audio features are extracted using a pre-trained VGGish model [24], while visual features included facial action units (FAUs), landmarks, eye gazes, and head pose. Finally, we introduce a multimodal depression recognition architecture to fuse the non-verbal behavioral features of the audio and video. In this architecture, a Transformer module to learn the potential characteristics, and an attentional multimodal feature fusion mechanism is proposed to capture the non-verbal patterns from the audiovisual features. To establish a baseline and open the dataset to researchers in the community of affective computing, we adopt both machine learning and deep learning methods. A great number of validations were performed on the collected dataset, obtaining excellent performance.

The novelties of this study are highlighted as follows:

(1) To promote collaboration and support future research, LMVD is made publicly available.[1] Due to privacy concerns, raw vlog data and detailed participant information are not shared. However, we provide access to processed data, including raw audio signals, VGGish features, FAUs, landmarks, head pose, and eye gazes. The dataset consists of 1,823 samples (214 h) from 1,475 participants. After reviewing existing depression detection datasets, we confirm that LMVD is the first large-scale, real-world vlog dataset available for this task. By analyzing natural behaviors and vocal patterns in vlogs, the LMVD dataset effectively captures depression-related cues in real-world settings. As a large-scale public resource, it advances AI-driven depression detection research and has significant potential for real-world application.
(2) To provide a benchmark dataset and generate a baseline in the affective computing community, machine learning and deep learning methods are adopted to perform the experimental validations. In addition, we also leverage the transformer and cross attention mechanism to learn the complementary non-verbal behaviors from the audiovisual features. Using LMVD, we obtain the values of 76.85%, 76.88%, 77.02%, 76.88% for the F1-score, accuracy, precision, recall, respectively. Moreover, the performance of MDDformer further demonstrates its effectiveness, with only 0.92M parameters 0.62G floating-point operations per second (FLOPs), indicating high computational efficiency.

The remainder of this paper is structured as follows: Section 2 details previous study on depression recognition. Our dataset is introduced in Section 3. Section 4 introduces the baseline and proposed methods. Section 5 discusses the experimental performance. Conclusions and future studies are described in Section 6.

2. Related works

In this section, we offer a detailed explanation of the collected dataset and its relevance to multimodal depression detection by reviewing related works.

2.1. Depression recognition dataset

Because of the privacy protection related to studies on depression, data collection is very complicated. Consequently, various research teams have endeavored to record their own databases for depression estimation. This section examines a total of 21 databases, with only nine being accessible to the public. Table 1 shows the available audiovisual depression databases over the past 30 years. Since 1994, depression recognition gained attention from researchers, resulting in the release of a dataset by Becker et al. [25]. Multimodal datasets are essential for depression detection, as complementary behavioral cues derived from different modalities can compensate for the inherent limitations of unimodal approaches. For example, Cai et al. [43] demonstrate that feature-level fusion of multi-channel EEG signals enhanced depression recognition accuracy by 14.2% compared to single-modality methods, suggesting that the integration of heterogeneous features enables the capture of underlying neurological signatures that are not accessible through unimodal analysis. Similarly, in our LMVD dataset, the combination of auditory prosody features (VGGish) with visual micro-expressions (e.g., facial action units, eye gazes, etc.) emulates this synergistic effect, potentially uncovering subtle depression-related patterns that may remain imperceptible when modalities are considered in isolation.

Based on Table 1, the following observations are considered:

[1] https://github.com/helang818/LMVD/

Table 1
A review of the depression datasets in the past thirty years. "A" denotes audio, "V" denotes video, and "T" denotes text. "Pu" denotes public, "Pr" represents private.

Database	Modality	Subjects	Samples	Pu /Pr
1: DementiaBank [25] (1994)	A+V+T	226		Pu
2: – [26] (1998)	A	43		Pr
3: – [27] (2000)	A	115		Pr
4: – [28] (2001)	A	41		Pr
5: – [29] (2004)	A	33		Pr
6: – [30](2006)	A	32		Pr
7: – [31] (2009)	A	57		Pr
8: ORI [32] (2009)	V	139		Pr
9: BlackDog [33] (2009)	A+V	80		Pr
10: ORYGEN [34] (2011)	V	191		Pr
11: – [35] (2012)	A	165		Pr
12: AVEC2013 [6] (2013)	A+V	292	150	Pu (raw data)
13: AVEC2014 [7] (2014)	A+V	292	300	Pu (raw data)
14: Crisis Text Line [36] (2014)	T	–		Pu (–)
15: DAIC-WoZ [37] (2014)	A+V+T	110	189	Pu (raw audio and audiovisual features)
16: Rochester [38] (2015)	V	27		Pr
17: CHI-MEI [39](2016)	V	53		Pr
18: Pittsburgh [40] (2018)	A+V	49	130	Pu (audiovisual features)
19: MODMA [41] (2020)	A+EEG	55		Pu (raw audio and EEG)
20: CMDC [42] (2022)	A+V+T	78		Pu (audiovisual features)
21: D-vlog [22] (2022)	A+V	816	961	Pu (audiovisual features (LLD, facial landmarks))
22: Ours (LMVD) (2025)	A+V	1475	1823	Pu (audio, various audiovisual features)

(1) **Data Accessibility:** Eight databases on depression detection are publicly available. However, most of the databases provide the extracted hand-crafted and deep-learning features, without providing the raw audio and video signals. Most importantly, our collected dataset has more samples for multimodal depression detection among individuals navigating their daily lives.
(2) **Sample Size:** In terms of the number of data samples, one can see that only the D-vlog [22] holds the previous record with 961 samples. LMVD boasts a significantly larger collection of 1,823 samples (214 h) from 1,475 participants. However, the databases AVEC2013 and AVEC2014 are the most frequently used by researchers, although AVEC2014 only contains 292 subjects with 300 samples.
(3) **Geographic Diversity:** Most of the databases are located in the EU, with only two collected in China. Based on the concepts of depression, the depressed subjects represent different behaviors in different countries.
(4) **Modality Coverage:** Most of the datasets contain audio and video modalities, while only a few contain the text modality for depression detection. Similar to existing datasets, LMVD primarily focuses on audio and video modalities. However, it offers a wider range of visual features compared to some existing datasets, including FAUs, landmarks, eye gazes, and head pose features, which can provide richer insights. As indicated in Table 1, 12 databases only have unimodal, and 50% of the them have the audio modality, because this metric is easily recorded. There are only eight (45%) multimodal databases available.

Overall, LMVD offers several advantages for researchers in the field of multimodal depression detection. Its larger sample size, diverse participant pool, raw data access, and broader range of features make it a valuable resource for advancing research efforts.

2.2. Multimodal depression detection

A series of studies, which utilize cues from audio, video, and text modalities, have been suggested to accurately evaluate the status of depression. Niu et al. [44] adopt combined spatio-temporal attention (STA) and multimodal attention feature fusion (MAFF) network for modeling the multimodal features. In a later study [45], Ni et al. design a hierarchical context-aware graph (HCAG) attention model that reflects layered information for the assessment of depression. In the work of [46], a graph neural network-based semi-supervised domain adaptation (GNN-SDA) technique is presented to address the challenges associated with limited sample sizes and isolated data clusters. Pan et al. [47] present an audiovisual attention architecture named AVA-DepressNet, which focuses on privacy protection concern and an embedded attention-driven module for identifying depression. In 2024, a transformer-based structure was introduced from the video, audio, and remote photoplethysmographic (rPPG) cues for multimodal prediction of depression [48]. Li et al. [49] propose a dynamic cross-modality alignment method based on hierarchical attention with learnable temporal warping, effectively addressing asynchronous between heterogeneous time-series signals. To tackle domain shift challenges, Li et al. [50] develop a partial domain adaptation framework that employs instance-level weighting to filter out source samples irrelevant to the target degradation stages in mechanical prognostics.

3. LMVD depression dataset

This section introduces the LMVD dataset, a large-scale multimodal dataset built "in the wild" for depression detection. We elaborate on the following aspects: (1) the motivation of this study, (2) the procedure of collecting the Chinese vlogs from the four media platforms, (3) the steps involved in annotating the vlogs, (4) the preprocessing of the data, and (5) the extraction of audio and visual features.

3.1. Motivation

As reported in Table 1, the limitations of the available datasets motivated us to build a large-scale dataset for depression detection in individuals navigating their daily lives. This large-scale dataset offers several advantages:

(1) **Promotes Research and Applications:** the collection of LMVD will boost both research endeavors and clinical scenarios in the community of automatic depression detection.
(2) **Benefits Various Stakeholders:** the developed prototype system offers an efficient solution applicable to various sectors, including government agencies, hospitals, and universities.

Table 2
The statistics of the collected videos from three Chinese multimedia platforms (Sina Weibo, Bilibili, and Tiktok).

Platform	Depressed category	Non-depressed category	All
Bilibili	1091	1093	**2184**
Tiktok	1147	1050	**2197**
Sina Weibo	65	214	**279**
Total	**2303**	**2357**	**4660**

Table 3
The statistics of the cleaned vlog videos from the three Chinese (Sina Weibo, Bilibili, Tiktok) multimedia platforms and YouTube.

Platform	Depressed category	Non-depressed category	All
Bilibili	222	334	**556**
Tiktok	314	133	**447**
Sina Weibo	65	48	**113**
YouTube	307	400	**707**
Total	**908**	**915**	**1823**

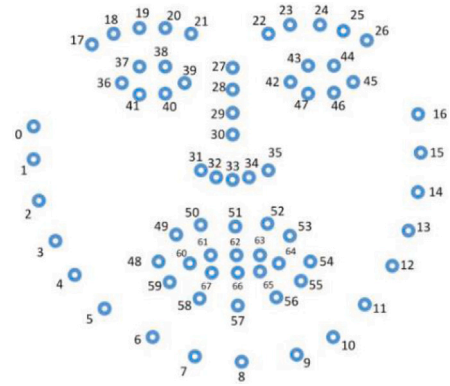

Fig. 1. Illustration of the 68 key points for facial landmarks feature.

3.2. Data collection

Our goal is to build a large-scale dataset for multimodal depression detection in individuals navigating their daily lives. To achieve this, we aim to collect depression and non-depression vlogs from different platforms with similar content distribution. Therefore, we collect the vlog videos from three Chinese multimedia platforms (Sina Weibo, Bilibili, and Tiktok). Data was collected from 1st Jan 2019 to 30th October 2023 using the following keywords (in Chinese):

(1) **Depressed category:** depression, my depressed life, and depressed vlog.
(2) **Non-depressed category:** daily Life, daily vlog, my vlog.

In addition to the Chinese platforms, we collect vlogs from YouTube using the same keywords in the same period. The collection process followed a similar approach. By collecting data from both Chinese and English platforms, we aimed to enhance the diversity and generalized ability of the LMVD dataset.

As shown in Table 2, the two platforms have balanced samples except for Sina Weibo. This is because many users adopt Sina Weibo to post text messages about their feelings, encompassing their lives, careers, and emotions. This resulted in 65 and 214 samples for the Depressed and Non-depressed. In total, there are 2303 and 2357 samples for the Depressed and Non-depressed categories, respectively. Bilibili, TikTok, and Sina Weibo have 2184, 2197, and 279 samples, respectively. In total, 4660 vlogs from the three Chinese multimedia platforms are used. In addition, the vlogs from YouTube are of good quality and are used directly in this work.

3.3. Data annotation

To perform the annotation for the depression and health vlogs, four master and ten undergraduate students are recruited. First, we ask the ten undergraduate students to check whether the vlogs have faces and if the audio is synthesized. Their main task was to identify and filter out unusable video clips. Through preliminary screening, videos with excessively short durations, synthetic audio, or occluded faces were removed to ensure the visibility of facial features and the availability of effective audio features. As shown in Table 3, we obtain 1823 data samples for the LMVD. For the Depressed and Non-depressed categories, the number of vlogs is 908 and 915, respectively. Secondly, we ask the four master students to recheck the vlogs to ensure the quality is sufficient for training the deep models for multimodal depression detection. This process ensures that the selected samples meet the quality requirements for training deep learning models. Vlogs that cannot be clearly classified will be discussed collectively to reach a consensus on their final categorization. Then we assign the 1823 vlogs to the ten undergraduate students who assigned them to either the Depressed or Non-depressed categories. Later, the master students check the labels assigned by the undergraduate students. Finally, we invite three professional psychiatrists to randomly sample the annotated vlogs. Each psychiatrist independently selected 80% of the data for review and engaged in discussion when discrepancies arose, ultimately completing the data annotation process. To quantify the reliability of the annotations, we calculate Cohen's κ coefficient at three levels: between undergraduate and graduate students ($\kappa = 0.63$), between graduate students and professional psychiatrists ($\kappa = 0.72$), and between psychiatrists ($\kappa = 0.85$). These results indicate substantial consistency across all annotation stages ($\kappa > 0.6$).

In terms of moral compliance and ethics, all vlogs are collected in strict accordance with the following provisions: (1) Data collection is conducted from public video platforms. During this process, only content explicitly marked as publicly available by the video up-loaders is accessed. (2) All data involve personally identifiable information is manually screened and removed. When the dataset is made available, only the processed video and audio features are provided, and the original audiovisual materials are strictly prohibited from being disclosed to any researcher.

Table 4 shows the duration of vlogs from different platforms. Bilibili exhibits the most significantly higher time spent between the Depressed and Non-depressed category. As a matter of fact, it shows the highest disparity between the two categories among all listed platforms. TikTok shows less time spent in both categories compared to Bilibili, but still has a considerable amount of time spent by users on the platform. The ratio of time spent between Depressed and Non-depressed is less than Bilibili, indicating a more balanced usage among the two categories. Sina Weibo displays a trend wherein users in the Non-depressed category spend more than twice the amount of time compared to those in the Depressed category. This implies that Sina Weibo is predominantly utilized by users who are not classified as depressed. YouTube has the closest time spent between the two categories, which might suggest a more uniform distribution of usage across users categorized as Depressed and Non-depressed.

3.4. Multimodal feature extraction

To establish a foundational benchmark for the field of depression recognition, we employ the primary features commonly used.

For audio features, the pre-trained VGGish [51] model is adopted. This is because the traditional hand-crafted features have the following limitations: (1) professional knowledge is often needed to design the discriminative features, and (2) additional valuable patterns may be lost in developing the deep features.

For visual features, FAUs, facial landmarks, eye gazes, and head pose features are adopted.

Table 4
The durations of the cleaned vlog from the three Chinese (Sina Weibo, Bilibili, Tiktok) and the YouTube multimedia platforms. S represents the seconds.

Platform	Depressed category (S)	Non-depressed category (S)	All (S)
Bilibili	90 296.40	168 395.92	**258 692.32**
Tiktok	35 384.80	19 344.84	**54 729.64**
Sina Weibo	13 889.23	28 966.00	**42 855.23**
YouTube	197 698.23	218 654.64	**416 352.87**
Total	**337 268.66**	**435 361.40**	**772630.06(214 h)**

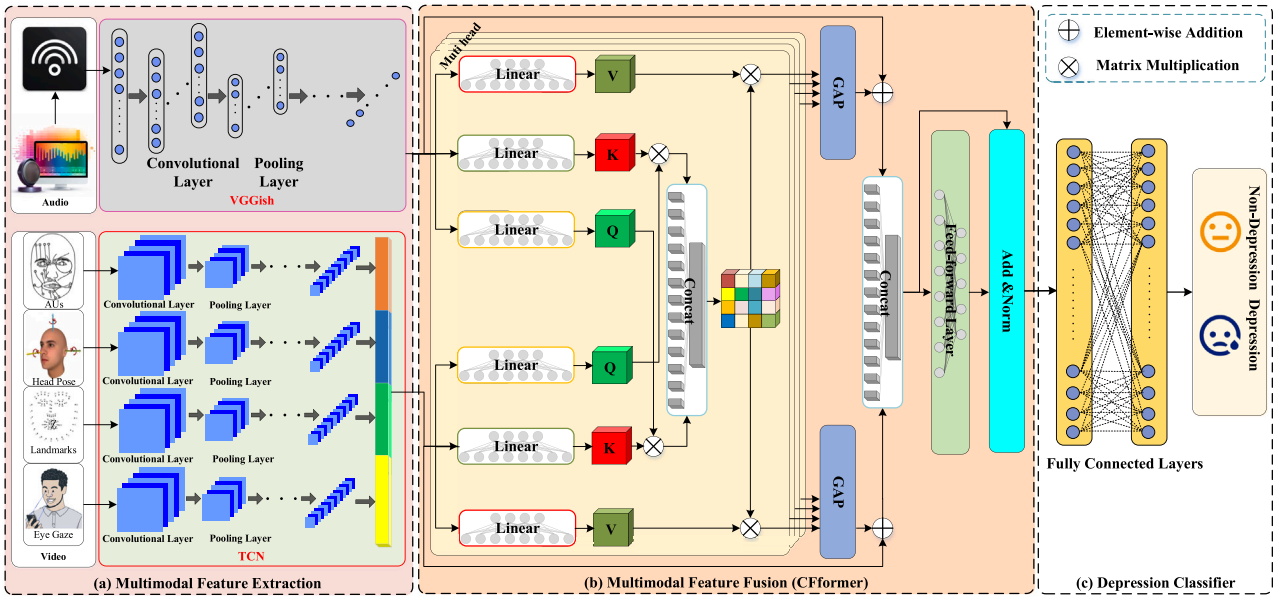

Fig. 2. The MDDformer model comprises three main steps: (a) **Multimodal Feature Extraction:** For the audio cue, deep features are extracted using VGGish. For the visual cue, AUs, head pose, landmarks, and eye gazes are extracted using a TCN architecture. (b) **Multimodal Feature Fusion:** The cross fusion transformer (CFformer) block leverages cross-modal fusion to learn the combined informative behaviors from the audiovisual cues. (c) **Depression Classifier:** Two fully connected layers followed by a softmax function are employed to predict depression.

(1) FAUs: We focus on a subset of 17 AUs (AU01, AU02, AU04, . . . , AU45) that have been linked to emotional expression. These features represent specific muscle movements in the face that can provide insights into a person's emotional state.
(2) Facial Landmarks: We extract facial landmarks (see Fig. 1) to represent the key points of the participant's facial structure. Facial landmarks are robust for capturing facial muscle movements, making them valuable features for tasks like emotion analysis, depression detection, and facial action unit detection.
(3) Eye Gazes: We extract eye gazes features to describe the direction of a participant's gaze. This information is represented by four sets of eye movement feature vectors with 12 dimensions each. The first two sets define the direction of eye movements in the coordinate space, while the latter two sets define the direction based on the head coordinate space. The values "0" and "1" represent the left and right eyes, respectively.
(4) Head Pose: We extract head pose features to capture the position and rotational direction of the participant's head. These features are represented by a 6-dimensional vector.

4. Methods

In this section, we describe the pipeline for multimodal depression detection using the LMVD. We first provide a brief overview of the pipeline, followed by a detailed description of the multimodal depression detection method.

4.1. Architecture overview

Fig. 2 illustrates the proposed MDDformer. First, the audio features are extracted by the VGGish architecture. For the visual cue, AUs, head pose, landmarks, and eye gazes features are extracted by TCN architecture. Then, the CFformer can adopt the advantages of cross fusion for learning behaviors from the audiovisual cues. Finally, two fully connected layers and the softmax function are performed to predict the depression.

4.2. Multimodal depression detection

4.2.1. Baseline model

Over the past decades, deep learning methods have gathered significant attention across various tasks. Consequently, to establish a benchmark in the field of depression detection, we adopt both traditional machine learning methods and several deep learning techniques. Specifically, K-nearest neighbor (KNN) [52] is employed to address two category problems, serving as the baseline model for multimodal depression detection. More information on KNN can be found in [52].

4.2.2. Structure of MDDformer

To effectively detect the discriminative patterns within audiovisual cues, MDDformer is proposed. Let us define the audio feature as $\mathbf{X}^a \in \mathbb{R}^{N\times D_a}$, and the video feature as $\mathbf{X}^v \in \mathbb{R}^{N\times D_v}$ before inputting into the MDDformer. Here, D_a represents the dimension of audio, D_v represents the dimension of video, and N denotes the length of sequences.

Initially, the transformer architecture [53] is proposed to model the relationships in natural language processing (NLP) tasks, which consists

of an encoder–decoder structure. Both the encoder and decoder are composed of multiple identical layers, each containing two main submodules, i.e., multi-head self-attention and position-wise feed-forward networks. In our task, to fuse the patterns from audio and video branch, an MDDformer is proposed. Firstly, visual feature extraction is performed through a dilated TCN. Given input visual features containing AUs, landmarks, head pose, and eye gazes data. Here, we take AUs as an example to illustrate the detailed process. The corresponding formulations are given as follows:

$$\begin{aligned}\mathbf{X}^v_{u1} &= Maxpool(ReLU(BatchNorm(Conv(\mathbf{X}^v_{u1})))) \\ \mathbf{X}^v_{u2} &= Maxpool(ReLU(BatchNorm(Conv(\mathbf{X}^v_{u1})))) \\ \mathbf{X}^v_{u3} &= Maxpool(ReLU(BatchNorm(Conv(\mathbf{X}^v_{u2})))) \\ \mathbf{X}^v_{u4} &= Maxpool(ReLU(BatchNorm(Conv(\mathbf{X}^v_{u3})))) \end{aligned} \tag{1}$$

where $\mathbf{X}^v_{u1}$ represents the input AUs, and $\mathbf{X}^v_{u1}$, $\mathbf{X}^v_{u2}$, $\mathbf{X}^v_{u3}$, and $\mathbf{X}^v_{u4}$ denote the outputs of the first, second, third, and fourth convolution layers, respectively.

The input audio feature $\mathbf{X}^a \in \mathbb{R}^{N\times D_a}$ is mapped to three matrices by three linear transformations, i.e., key K_a, query Q_a, and value V_a.

$$Q_a = \mathbf{X}^a W_{Q_a}, K_a = \mathbf{X}^a W_{K_a}, V_a = \mathbf{X}^a W_{V_a} \tag{2}$$

where W_{Q_a}, W_{K_a}, and W_{V_a} denotes the weights of linear transformation. The video feature $\mathbf{X}^v \in \mathbb{R}^{N\times D_v}$ can be mapped to three matrices by three linear transformations, i.e., key K_v, query Q_v, value V_v.

$$Q_v = \mathbf{X}^v W_{Q_v}, K_v = \mathbf{X}^v W_{K_v}, V_v = \mathbf{X}^v W_{V_v} \tag{3}$$

where W_{Q_v}, W_{K_v}, and W_{V_v} denotes the weights of linear transformation.

Next, Q_v is multiplied with K_a^T to generate the feature $F_a = \frac{Q_v K_a^T}{\sqrt{d_k}}$ and Q_a multiplied with K_v^T to generate the feature $F_v = \frac{Q_a K_v^T}{\sqrt{d_k}}$. Then we concatenate F_v and F_a to generate the feature map, i.e., F_{av}:

$$F_{av} = Concat(F_a, F_v) \tag{4}$$

The self attention of the audio branch can be expressed as:

$$\text{Attention_a}\ (Q_a, K_a, V_a) = \text{softmax}\left(F_{av} V_a\right) \tag{5}$$

where d_k is the dimension of the F_{av} matrix.

The self attention of the visual branch can be expressed as:

$$\text{Attention_v}\ (Q_v, K_v, V_v) = \text{softmax}\left(F_{av} V_v\right) \tag{6}$$

where d_k is the dimension of the F_{av} matrices. Then, we concatenate the outputs of each head and reshape them to add with the feature $\mathbf{X}^a \in \mathbb{R}^{N\times D_a}$, generating the fusion feature.

$$\begin{aligned} F_f = &Concat((Concat\left(head_{1_a}, head_{2_a}, \ldots, head_{h_a}\right) W_a \\ &+\mathbf{X}^a) + (Concat\left(head_{1_v}, head_{2_v}, \ldots, head_{h_v}\right) W_v + \mathbf{X}^v)) \end{aligned} \tag{7}$$

where h is the number of attention heads, $head_{h_a}$ and $head_{h_v}$ represent audio-oriented and vision-oriented heads with independent projections, and W_a and W_v are weight matrices.

Following the concatenate operation, F_f is then input to the feed-forward network, adopting the add/norm operation to generate the feature F_n:

$$F_n = Norm(FFN(F_f) + F_f) \tag{8}$$

where $Norm$ is the normalization operation.

Following the add and layer normalization, two fully connected layers with ELU activation, and dropout operation are performed on F_n, represented by F_p:

$$F_p = Softmax(FC(ELU(Dropout))) \tag{9}$$

where $Dropout$, ELU, FC, and $Softmax$ represent dropout, activation, fully connected layer, and softmax function, respectively.

Finally, cross entropy mechanism is adopted as the loss function:

$$\mathcal{L} = \frac{1}{N}\sum_i -[y_i \cdot \log(p_i) + (1-y_i)\cdot \log(1-p_i)] \tag{10}$$

where N denotes the list of samples, y_i is the label (depression and non-depression), and p_i is the predicted value (between 0 and 1).

5. Results

We elaborate on the details the experimental setup and describe the MDDformer performances in this section.

5.1. Experimental setup

We implement and trained the MDDformer model using the PyTorch deep learning toolkit. A 10-fold cross-validation is performed for validating the efficiency of MDDformer. The Adam optimizer is set to $\beta = (0.9, 0.999)$ and $\epsilon = 1e8$ with the batch size of 4. The initial training learning rate size is 0.00001 and then updated with cosine annealing LR decay. To overcome the overfitting problem, a dropout of 0.2 is adopted in the linear layers and the total epochs is set to 300. Our architecture is evaluated on four NVIDIA Tesla V100-DGX with 32 GB.

5.2. Evaluation metrics

In general, the classification performance is mainly evaluated using five metrics for binary classification problems: accuracy, precision, recall (also known as sensitivity), specificity, and F1-score. Here, true positive (TP) indicates samples with positive labels that are correctly predicted as positive. Similarly, true negative (TN), false positive (FP), and false negative (FN) respectively represent samples correctly predicted as negative, incorrectly predicted as positive, and incorrectly predicted as negative, respectively. The formula can be expressed as:

$$Accuracy = \frac{TP+TN}{TP+FP+TN+FN} \tag{11}$$

$$Precision = \frac{TP}{TP+FP} \tag{12}$$

$$Recall = \frac{TP}{TP+FN} \tag{13}$$

$$F1-score = 2\times\frac{Precision\times Recall}{Precision+Recall} \tag{14}$$

5.2.1. Performances of baseline methods

Table 5 presents the results of the ablation study, which investigates the impact of different architectural configurations on the performance of the proposed model for depression recognition. (1) First, we examine the effect of varying the number of attention heads under the concatenation setting. While increasing the number of heads from 2 to 16 leads to slight improvements (e.g., the F1-score increases from 74.02% to 74.54%), the overall performance gains are marginal. This suggests that merely increasing the number of attention heads yields better performances in this context. (2) Second, we assess the contribution of residual blocks in both the audio and visual branches. Removing both residual blocks results in a noticeable decline in performance, with the F1-score dropping to 74.56%. When only the visual or audio residual block is removed, the model performs slightly better (F1-scores of 75.24% and 75.26%, respectively), indicating that both modalities contribute positively and synergistically to the final prediction. These results underscore the importance of residual connections in enhancing the representational capacity of each modality. (3) Third, we compare different multimodal fusion strategies. The concatenation-based fusion consistently outperforms the add operation. In particular, the best performance is achieved when both audio and visual residual blocks are retained and their features are fused via concatenation, resulting in the highest metrics with a F1-score of 76.85%. In summary, these findings highlight the critical role of residual connections and the superiority of concatenation-based fusion in optimizing model performance for multimodal depression recognition.

Table 5
Ablation results with different components of MDDformer for depression detection. Head_num refers to the number of head of MDDformer.

	Accuracy (%)	Precision (%)	Recall (%)	F1-score (%)
head_num=2 (concat)	74.03	74.05	74.03	74.02
head_num=8 (concat)	74.03	74.26	74.03	73.96
head_num=16 (concat)	74.59	74.79	74.59	74.54
w/o audio and visual residual blocks (concat)	74.58	74.70	74.58	74.56
w/o visual residual blocks (concat)	75.37	75.42	75.27	75.24
w/o audio residual blocks (concat)	75.27	75.28	75.27	75.26
w/ audio and visual residual blocks (add)	74.73	74.83	74.73	74.69
w/ audio and visual residual blocks (concat)	**76.88**	**77.02**	**76.88**	**76.85**

Table 6
Comparative analysis of results across cultural backgrounds.

		Accuracy (%)	Precision (%)	Recall (%)	F1-score (%)
Chinese	Male	85.71	85.72	85.71	85.72
	Female	83.13	83.81	83.13	83.03
	All	81.08	81.39	81.08	80.91
Foreigner	Male	68.00	68.76	68.00	66.44
	Female	73.33	77.65	73.33	70.72
	All	71.43	72.89	71.43	69.72

Table 7
Comparative analysis of results across gender.

		Accuracy (%)	Precision (%)	Recall (%)	F1-score (%)
Male	Chinese	85.71	85.72	85.71	85.72
	Foreigner	68.00	68.76	68.00	66.44
	All	72.22	75.90	72.22	71.96
Female	Chinese	83.13	83.81	83.13	83.03
	Foreigner	73.33	77.65	73.33	70.72
	All	76.56	78.05	76.56	76.36

Table 6 presents the experimental results across different cultural backgrounds. Notably, the Chinese cultural background exhibits a significantly higher accuracy, outperforming the Western cultural background by 9.65%. This discrepancy is even more pronounced among male participants, reaching a difference of 17.71%, whereas the difference among female participants is comparatively smaller, at 9.8%. This is because the majority of the samples in the dataset are from Chinese participants, while samples from Western cultural backgrounds are relatively scarce.

Table 7 indicates that across gender groups, female samples achieve higher overall accuracy than male samples, with a difference of 4.22%. Within the Chinese cultural context, this gender difference is minimal, as male samples slightly outperform female samples by 2.58%. In contrast, the gender disparity is more pronounced under the Western cultural background, where female samples exceed male samples by 5.33%.

To further validate the performances of the MDDformer, several machine learning and deep learning architectures are adopted i.e., KNN, SVM, LR, RF, Xception, ViT, BiLSTM, and SEResnet. To make a fair comparison, the weighted accuracy, precision, recall, and F1-score are adopted. As shown in Table 8, the MDDformer obtains the best performance in term of the evaluation metrics. The terms "add" and "concat" represent the addition and concatenate operation, respectively. In our task, we list the models in ascending order according of accuracy. One can note that the accuracy values of 58.34%, 64.66%, 64.88%, 69.23%, 70.99%, 71.16%, 71.38%, 72.31%, 72.54%, 72.59%, 72.92%, 73.03%, 76.88% (see Table 8). Moreover, to demonstrate the superiority of the proposed MDDformer, we compare the parameter count and computational cost across different models. As shown in Table 8, MDDformer demonstrates excellent computational efficiency, requiring only 0.92M parameters and 0.62G FLOPs (floating-point operations per second).

Fig. 3 provides the confusion matrix for the MDDformer with other baseline architectures. The MDDformer obtains the best performances regarding the classification of depression and non-depression. Note that each row represents the true labels, and each column represents the predicted values.

From Fig. 4, it is evident that the classification results of the MDDformer stand out compared to those of other models. The MDDformer yields clearer and more uniform results, indicating its superior performance in classification effectiveness over other methods.

Fig. 5 presents the classification performances using a bar chart. Each model is depicted by a group of four bars, each corresponding to one of the evaluation metrics. From left to right, the models are KNN, SVM, LR, RF, Xception (add), ViT (add), Xception (concat), BiLSTM (add), SEResnet (concat), BiLSTM (concat), SEResnet (add), ViT (concat), and the MDDformer. The MDDformer is represented by the last group of bars, displaying performance measures consistently around the 76%–77% mark for all four metrics. Notably, the performance of the MDDformer surpasses that of the other baseline models depicted in the chart.

6. Conclusion

In this paper, we introduce a large-scale vlog dataset, namely LMVD, for depression recognition based on audiovisual cues collected from individuals in real-life daily scenarios. The proposed dataset contains

Table 8
Performance of the different baseline methods and the MDDformer. Accuracy, precision, recall, and F1-score are adopted as the evaluation metrics for depression detection.

Model	Accuracy (%)	Precision (%)	Recall (%)	F1-score (%)	Para.	FLOPs
KNN	58.34	59.75	58.34	56.87	–	–
SVM	64.66	65.77	64.66	64.06	–	–
LR	64.88	65.19	64.88	64.73	–	–
RF	69.23	69.34	69.23	69.17	–	–
Xception(add)	70.99	71.92	70.99	70.67	21.32M	0.46G
ViT(add)	71.16	71.91	71.16	70.92	4.07M	0.26G
Xception(concat)	71.38	71.94	71.38	71.19	21.31M	0.78G
BiLSTM(add)	72.31	72.69	72.31	72.20	0.98M	0.72G
SEResnet(concat)	72.54	73.13	72.54	72.36	18.78M	0.96G
BiLSTM(concat)	72.59	73.02	72.59	72.47	1.25M	0.92G
SEResnet(add)	72.92	73.71	72.92	72.69	18.78M	0.55G
ViT(concat)	73.03	73.52	73.03	72.90	4.07M	0.39G
MDDformer	**76.88**	**77.02**	**76.88**	**76.85**	**0.92M**	**0.62G**

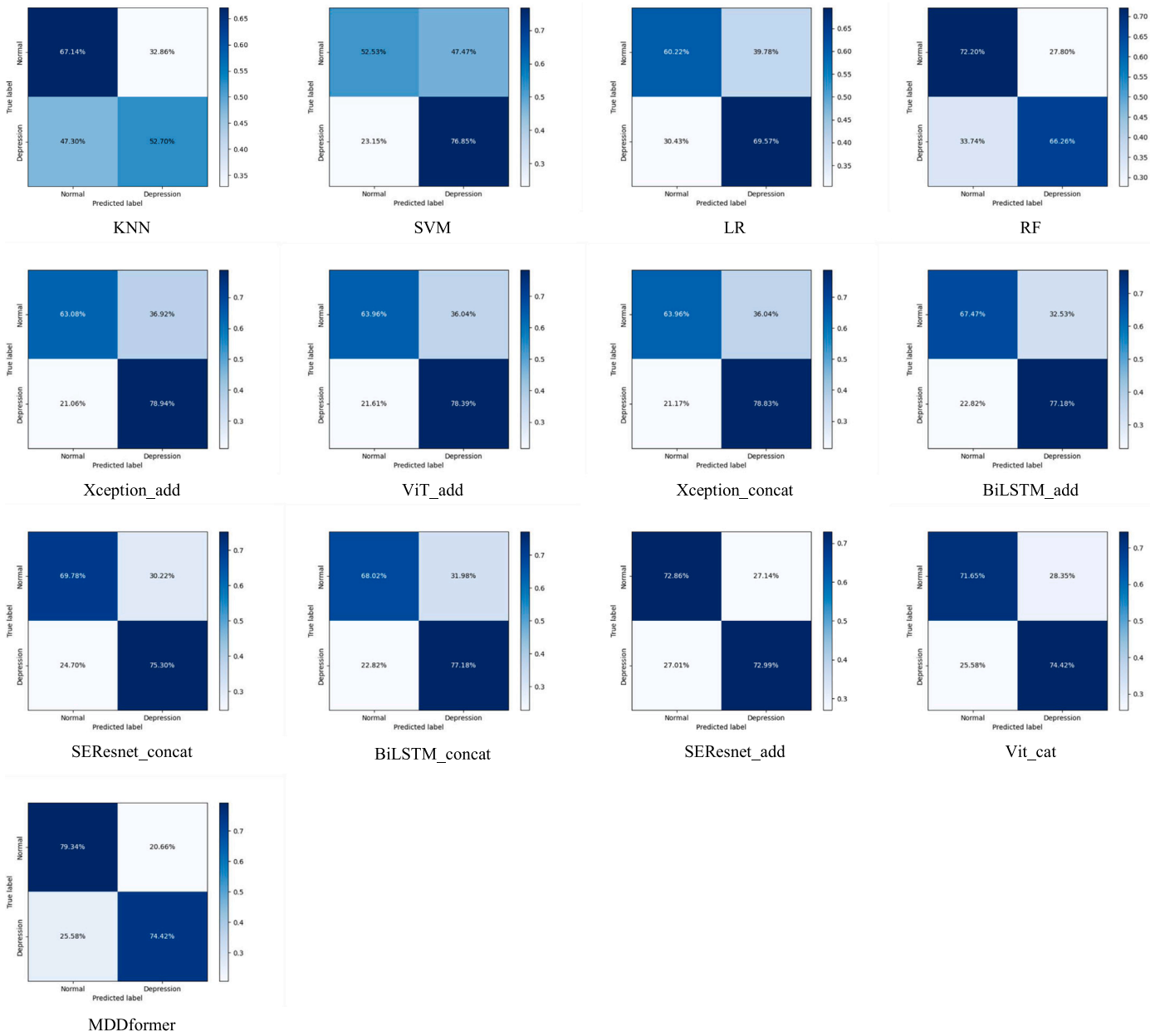

Fig. 3. Confusion matrix of the MDDformer and other baseline methods. Each row represents the true labels, and each column represents the predicted values. Element (m, n) indicates the percentage of samples from class m being classified as class n.

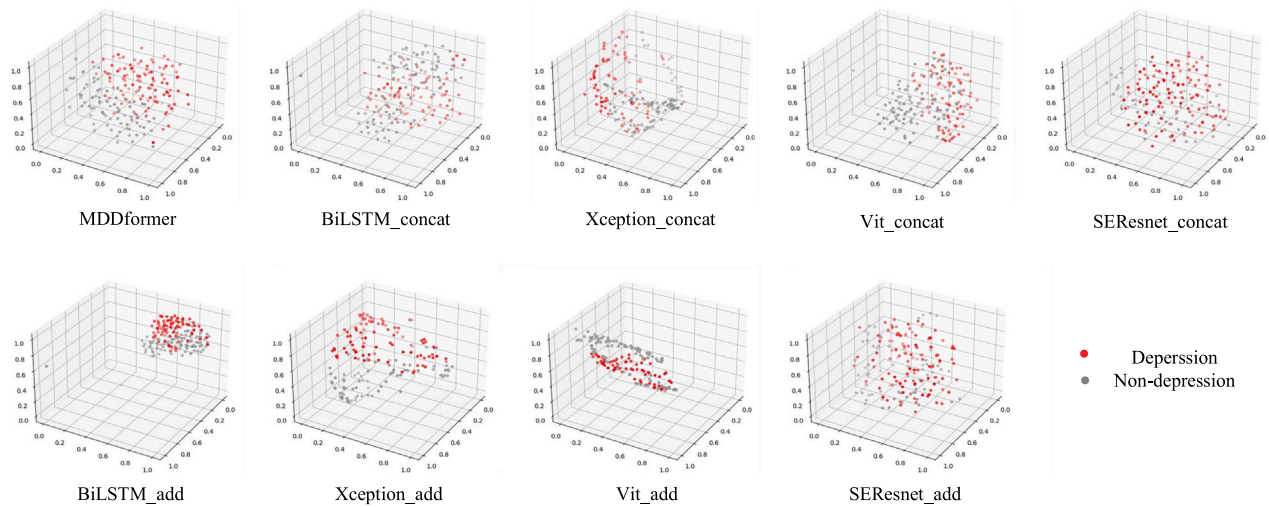

Fig. 4. Visualization of the multimodal features using 3D t-SNE. The red dots represent data from depressed subjects, while the gray dots represent data from healthy control subjects.

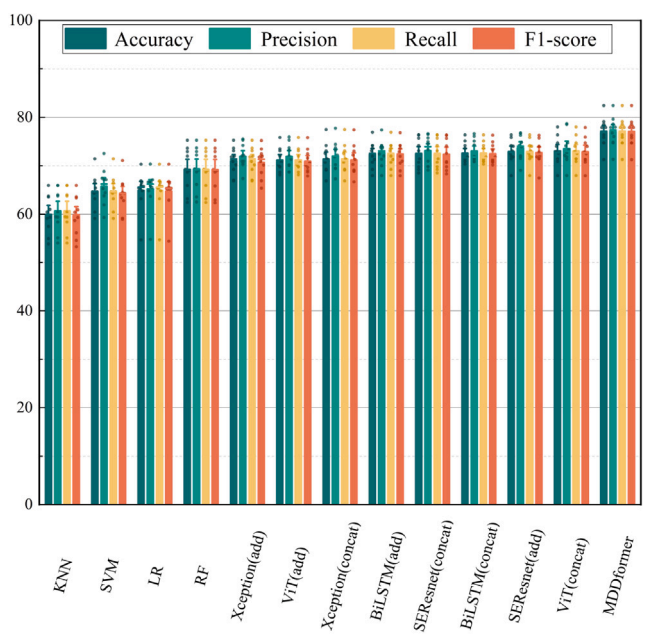

Fig. 5. The grouped bar chart for the different baseline methods and MDDformer.

1,823 samples (totaling 214 h) from 1,475 participants. We propose a baseline architecture, MDDformer, to validate its effectiveness in depression recognition. In addition, several conventional and deep learning models – including KNN, SVM, Logistic Regression (LR), Random Forest (RF), Xception, BiLSTM, SE-ResNet, and ViT – are employed for performance comparison. More importantly, LMVD is currently the largest dataset for audiovisual-based depression recognition in real-world daily contexts, representing a significant contribution to the field of affective computing. In future work, we plan to expand the dataset and explore non-verbal behavioral features for enhanced multimodal depression recognition.

CRediT authorship contribution statement

Lang He: Writing – review & editing, Writing – original draft, Methodology, Funding acquisition, Formal analysis, Data curation, Conceptualization. **Kai Chen:** Data curation. **Junnan Zhao:** Conceptualization. **Yimeng Wang:** Formal analysis. **Ercheng Pei:** Formal analysis. **Haifeng Chen:** Writing – review & editing. **Jiewei Jiang:** Writing – review & editing. **Shiqing Zhang:** Writing – review & editing. **Jie Zhang:** Methodology. **Zhongmin Wang:** Methodology. **Tao He:** Conceptualization. **Prayag Tiwari:** Writing – review & editing.

Declaration of competing interest

The authors declare that they have no known competing financial interests or personal relationships that could have appeared to influence the work reported in this paper.

Acknowledgments

This work is supported by National Natural Science Foundation of China (grant 62376215, 62306172, 62402386, 62276210, 62206219), the Open Fund of National Engineering Laboratory for Big Data System Computing Technology (Grant No. SZU-BDSC-OF2024-16), the Key Research and Development Project of Shaanxi Province (2024GX-YBXM-137), the Xi'an University of Posts and Telecommunications Innovation Fund (CXJJYL2023044), and the Key Research and Development Project of Xianyang (L2024-ZDYF-ZDYF-SF-0067).

Data availability

Data will be made available on request.

References

[1] Nader Salari, Amin Hosseinian-Far, Rostam Jalali, Aliakbar Vaisi-Raygani, Shna Rasoulpoor, Masoud Mohammadi, Shabnam Rasoulpoor, Behnam Khaledi-Paveh, Prevalence of stress, anxiety, depression among the general population during the COVID-19 pandemic: a systematic review and meta-analysis, Glob. Heal. 16 (1) (2020) 1–11.

[2] Matthias Pierce, Sally McManus, Holly Hope, Matthew Hotopf, Tamsin Ford, Stephani L. Hatch, Ann John, Evangelos Kontopantelis, Roger T. Webb, Simon Wessely, et al., Mental health responses to the COVID-19 pandemic: a latent class trajectory analysis using longitudinal UK data, Lancet Psychiatry 8 (7) (2021) 610–619.

[3] Lang He, Mingyue Niu, Prayag Tiwari, Pekka Marttinen, Rui Su, Jiewei Jiang, Chenguang Guo, Hongyu Wang, Songtao Ding, Zhongmin Wang, et al., Deep learning for depression recognition with audiovisual cues: A review, Inf. Fusion 80 (2022) 56–86.

[4] Keith Hawton, Carolina Casañas i Comabella, Camilla Haw, Kate Saunders, Risk factors for suicide in individuals with depression: a systematic review, J. Affect. Disord. 147 (1–3) (2013) 17–28.

[5] Modhurima Moitra, Damian Santomauro, Pamela Y. Collins, Theo Vos, Harvey Whiteford, Shekhar Saxena, Alize J. Ferrari, The global gap in treatment coverage for major depressive disorder in 84 countries from 2000–2019: a systematic review and Bayesian meta-regression analysis, PLoS Med. 19 (2) (2022) e1003901.

[6] Michel Valstar, Björn Schuller, Kirsty Smith, Florian Eyben, Bihan Jiang, Sanjay Bilakhia, Sebastian Schnieder, Roddy Cowie, Maja Pantic, AVEC2013: the continuous audio/visual emotion and depression recognition challenge, in: Proceedings of the 3rd ACM International Workshop on Audio/Visual Emotion Challenge, 2013, pp. 3–10.

[7] Michel Valstar, Björn Schuller, Kirsty Smith, Timur Almaev, Florian Eyben, Jarek Krajewski, Roddy Cowie, Maja Pantic, AVEC 2014: 3D dimensional affect and depression recognition challenge, in: Proceedings of the 4th International Workshop on Audio/Visual Emotion Challenge, ACM, Orlando, FL, USA, 2014, pp. 3–10.

[8] Michel Valstar, Jonathan Gratch, Björn Schuller, Fabien Ringeval, Denis Lalanne, Mercedes Torres Torres, Stefan Scherer, Giota Stratou, Roddy Cowie, Maja Pantic, AVEC 2016: Depression, mood, and emotion recognition workshop and challenge, in: Proceedings of the 6th International Workshop on Audio/Visual Emotion Challenge, 2016, pp. 3–10.

[9] Lang He, Dongmei Jiang, Hichem Sahli, Automatic depression analysis using dynamic facial appearance descriptor and dirichlet process fisher encoding, IEEE Trans. Multimed. 21 (6) (2018) 1476–1486.

[10] Yu Zhu, Yuanyuan Shang, Zhuhong Shao, Guodong Guo, Automated depression diagnosis based on deep networks to encode facial appearance and dynamics, IEEE Trans. Affect. Comput. 9 (4) (2017) 578–584.

[11] Xiuzhuang Zhou, Kai Jin, Yuanyuan Shang, Guodong Guo, Visually interpretable representation learning for depression recognition from facial images, IEEE Trans. Affect. Comput. 11 (3) (2020) 542–552.

[12] Lang He, Jonathan Cheung-Wai Chan, Zhongmin Wang, Automatic depression recognition using CNN with attention mechanism from videos, Neurocomputing 422 (2021) 165–175.

[13] Lang He, Prayag Tiwari, Chonghua Lv, WenShuai Wu, Liyong Guo, Reducing noisy annotations for depression estimation from facial images, Neural Netw. 153 (2022) 120–129.

[14] Lan Zhang, Jian Zhao, Lang He, Jian Jia, Xianjia Meng, An improved global-local fusion network for depression detection telemedicine framework, IEEE Internet Things J. (2023).

[15] Noor Abdalkareem Lafta, A comprehensive analysis of keras: Enhancing deep learning applications in network engineering, Babylon. J. Netw. 2023 (2023) 94–100.

[16] Xiaoming Cao, Lingling Zhai, Pengpeng Zhai, Fangfei Li, Tao He, Lang He, Deep learning-based depression recognition through facial expression: A systematic review, Neurocomputing (2025) 129605.

[17] Lang He, Zheng Li, Prayag Tiwari, Feng Zhu, Di Wu, LSCAformer: Long and short-term cross-attention-aware transformer for depression recognition from video sequences, Biomed. Signal Process. Control. 98 (2024) 106767.

[18] Lang He, Zheng Li, Prayag Tiwari, Cui Cao, Jize Xue, Feng Zhu, Di Wu, Depressformer: Leveraging video swin transformer and fine-grained local features for depression scale estimation, Biomed. Signal Process. Control. 96 (2024) 106490.

[19] Sweta Bhadra, Chandan Jyoti Kumar, An insight into diagnosis of depression using machine learning techniques: a systematic review, Curr. Med. Res. Opin. 38 (5) (2022) 749–771.

[20] Khan Md Hasib, Md Rafiqul Islam, Shadman Sakib, Md Ali Akbar, Imran Razzak, Mohammad Shafiul Alam, Depression detection from social networks data based on machine learning and deep learning techniques: An interrogative survey, IEEE Trans. Comput. Soc. Syst. 10 (4) (2023) 1568–1586.

[21] Zhaocheng Huang, Julien Epps, Dale Joachim, Brian Stasak, James R. Williamson, Thomas F. Quatieri, Domain adaptation for enhancing speech-based depression detection in natural environmental conditions using dilated CNNs, in: INTERSPEECH, 2020, pp. 4561–4565.

[22] Jeewoo Yoon, Chaewon Kang, Seungbae Kim, Jinyoung Han, D-vlog: Multimodal vlog dataset for depression detection, in: Proceedings of the AAAI Conference on Artificial Intelligence, 2022, pp. 12226–12234.

[23] Kaining Mao, Wei Zhang, Deborah Baofeng Wang, Ang Li, Rongqi Jiao, Yanhui Zhu, Bin Wu, Tiansheng Zheng, Lei Qian, Wei Lyu, et al., Prediction of depression severity based on the prosodic and semantic features with bidirectional LSTM and time distributed CNN, IEEE Trans. Affect. Comput. 14 (3) (2022) 2251–2265.

[24] Sami Abu-El-Haija, Nisarg Kothari, Joonseok Lee, Paul Natsev, George Toderici, Balakrishnan Varadarajan, Sudheendra Vijayanarasimhan, Youtube-8m: A large-scale video classification benchmark, 2016, arXiv preprint arXiv:1609.08675.

[25] James T. Becker, François Boiler, Oscar L. Lopez, Judith Saxton, Karen L. McGonigle, The natural history of cognitive decline in Alzheimer's disease, Arch. Neurol. 51 (6) (1994) 585–594.

[26] H.H. Stassen, S. Kuny, D. Hell, The speech analysis approach to determining onset of improvement under antidepressants, Eur. Neuropsychopharmacol. 8 (4) (1998) 303–310.

[27] Daniel Joseph France, Richard G. Shiavi, Stephen Silverman, Marilyn Silverman, M. Wilkes, Acoustical properties of speech as indicators of depression and suicidal risk, IEEE Trans. Biomed. Eng. 47 (7) (2000) 829–837.

[28] Murray Alpert, Enrique R. Pouget, Raul R. Silva, Reflections of depression in acoustic measures of the patient's speech, J. Affect. Disord. 66 (1) (2001) 59–69.

[29] E.I.I. Moore, Mark Clements, John Peifer, Lydia Weisser, Comparing objective feature statistics of speech for classifying clinical depression, in: Engineering in Medicine and Biology Society, 2004. IEMBS'04. 26th Annual International Conference of the IEEE, vol. 1, IEEE, San Francisco, CA, USA, 2004, pp. 17–20.

[30] T. Yingthawornsuk, H. Kaymaz Keskinpala, D. France, D. Mitchell Wilkes, Richard G. Shiavi, Ronald M. Salomon, Objective estimation of suicidal risk using vocal output characteristics, in: Ninth International Conference on Spoken Language Processing, ISCA, Pittsburgh, PA, USA, 2006, pp. 649–652.

[31] Jeffrey F. Cohn, Tomas Simon Kruez, Iain Matthews, Ying Yang, Minh Hoai Nguyen, Margara Tejera Padilla, Feng Zhou, Fernando De la Torre, Detecting depression from facial actions and vocal prosody, in: 2009 3rd International Conference on Affective Computing and Intelligent Interaction and Workshops, IEEE, 2009, pp. 1–7.

[32] Namunu C. Maddage, Rajinda Senaratne, Lu-Shih Alex Low, Margaret Lech, Nicholas Allen, Video-based detection of the clinical depression in adolescents, in: Engineering in Medicine and Biology Society, 2009. EMBC 2009. Annual International Conference of the IEEE, IEEE, Minneapolis, MN, USA, 2009, pp. 3723–3726.

[33] Sharifa Alghowinem, Roland Goecke, Michael Wagner, Julian Epps, Michael Breakspear, Gordon Parker, From joyous to clinically depressed: Mood detection using spontaneous speech, in: Proceedings of the Twenty-Fifth International Florida Artificial Intelligence Research Society Conference, AAAI, Marco Island, FL, USA, 2012, pp. 141–146.

[34] K. Ooi, L. Low, M. Lech, N. Allen, Prediction of clinical depression in adolescents using facial image analysis, in: WIAMIS 2011: 12th International Workshop on Image Analysis for Multimedia Interactive Services, WIAMIS, Delft, The Netherlands, 2011, pp. 1–4.

[35] James C. Mundt, Adam P. Vogel, Douglas E. Feltner, William R. Lenderking, Vocal acoustic biomarkers of depression severity and treatment response, Biol. Psychiatry 72 (7) (2012) 580–587.

[36] Ge Ge Jackie Chen, Visualizations for mental health topic models, in: Visualizations for Mental Health Topic Models, MIT, Cambridge, MA, USA, 2014, pp. 1–54.

[37] Jonathan Gratch, Ron Artstein, Gale M. Lucas, Giota Stratou, Stefan Scherer, Angela Nazarian, Rachel Wood, Jill Boberg, David DeVault, Stacy Marsella, et al., The distress analysis interview corpus of human and computer interviews, in: LREC, 2014, pp. 3123–3128.

[38] Dawei Zhou, Jiebo Luo, Vincent M.B. Silenzio, Yun Zhou, Jile Hu, Glenn Currier, Henry A. Kautz, Tackling mental health by integrating unobtrusive multimodal sensing, in: AAAI, 2015, pp. 1401–1409.

[39] Kun-Yi Huang, Chung-Hsien Wu, Yu-Ting Kuo, Fong-Lin Jang, Unipolar depression vs. Bipolar disorder: An elicitation-based approach to short-term detection of mood disorder, in: INTERSPEECH, 2016, pp. 1452–1456.

[40] Hamdi Dibeklioğlu, Zakia Hammal, Jeffrey F. Cohn, Dynamic multimodal measurement of depression severity using deep autoencoding, IEEE J. Biomed. Heal. Inform. 22 (2) (2018) 525–536.

[41] Hanshu Cai, Yiwen Gao, Shuting Sun, Na Li, Fuze Tian, Han Xiao, Jianxiu Li, Zhengwu Yang, Xiaowei Li, Qinglin Zhao, et al., MODMA dataset: a multi-model open dataset for mental-disorder analysis, 2020, arXiv preprint arXiv:2002.09283.

[42] Bochao Zou, Jiali Han, Yingxue Wang, Rui Liu, Shenghui Zhao, Lei Feng, Xiangwen Lyu, Huimin Ma, Semi-structural interview-based Chinese multimodal depression corpus towards automatic preliminary screening of depressive disorders, IEEE Trans. Affect. Comput. 14 (4) (2023) 2823–2838.

[43] Hanshu Cai, Zhidiao Qu, Zhe Li, Yi Zhang, Xiping Hu, Bin Hu, Feature-level fusion approaches based on multimodal EEG data for depression recognition, Inf. Fusion 59 (2020) 127–138.

[44] Mingyue Niu, Jianhua Tao, Bin Liu, Jian Huang, Zheng Lian, Multimodal spatiotemporal representation for automatic depression level detection, IEEE Trans. Affect. Comput. (2020).

[45] Meng Niu, Kai Chen, Qingcai Chen, Lufeng Yang, HCAG: A hierarchical context-aware graph attention model for depression detection, in: ICASSP 2021-2021 IEEE International Conference on Acoustics, Speech and Signal Processing, ICASSP, IEEE, 2021, pp. 4235–4239.

[46] Tao Chen, Yanrong Guo, Shijie Hao, Richang Hong, Semi-supervised domain adaptation for major depressive disorder detection, IEEE Trans. Multimed. (2023).

[47] Yuchen Pan, Yuanyuan Shang, Zhuhong Shao, Tie Liu, Guodong Guo, Hui Ding, Integrating deep facial priors into landmarks for privacy preserving multimodal depression recognition, IEEE Trans. Affect. Comput. (2023).

[48] Huiting Fan, Xingnan Zhang, Yingying Xu, Jiangxiong Fang, Shiqing Zhang, Xiaoming Zhao, Jun Yu, Transformer-based multimodal feature enhancement networks for multimodal depression detection integrating video, audio and remote photoplethysmograph signals, Inf. Fusion 104 (2024) 102161.

[49] Xiang Li, Shupeng Yu, Yaguo Lei, Naipeng Li, Bin Yang, Dynamic vision-based machinery fault diagnosis with cross-modality feature alignment, IEEE/CAA J. Autom. Sin. 11 (10) (2024) 2068–2081.

[50] Xiang Li, Wei Zhang, Xu Li, Hongshen Hao, Partial domain adaptation in remaining useful life prediction with incomplete target data, IEEE/ASME Trans. Mechatronics 29 (3) (2023) 1903–1913.

[51] Shawn Hershey, Sourish Chaudhuri, Daniel P.W. Ellis, Jort F. Gemmeke, Aren Jansen, R. Channing Moore, Manoj Plakal, Devin Platt, Rif A. Saurous, Bryan Seybold, et al., CNN architectures for large-scale audio classification, in: 2017 IEEE International Conference on Acoustics, Speech and Signal Processing, ICASSP, IEEE, 2017, pp. 131–135.

[52] Leif E. Peterson, K-nearest neighbor, Scholarpedia 4 (2) (2009) 1883.

[53] Ashish Vaswani, Noam Shazeer, Niki Parmar, Jakob Uszkoreit, Llion Jones, Aidan N. Gomez, Łukasz Kaiser, Illia Polosukhin, Attention is all you need, Adv. Neural Inf. Process. Syst. 30 (2017).